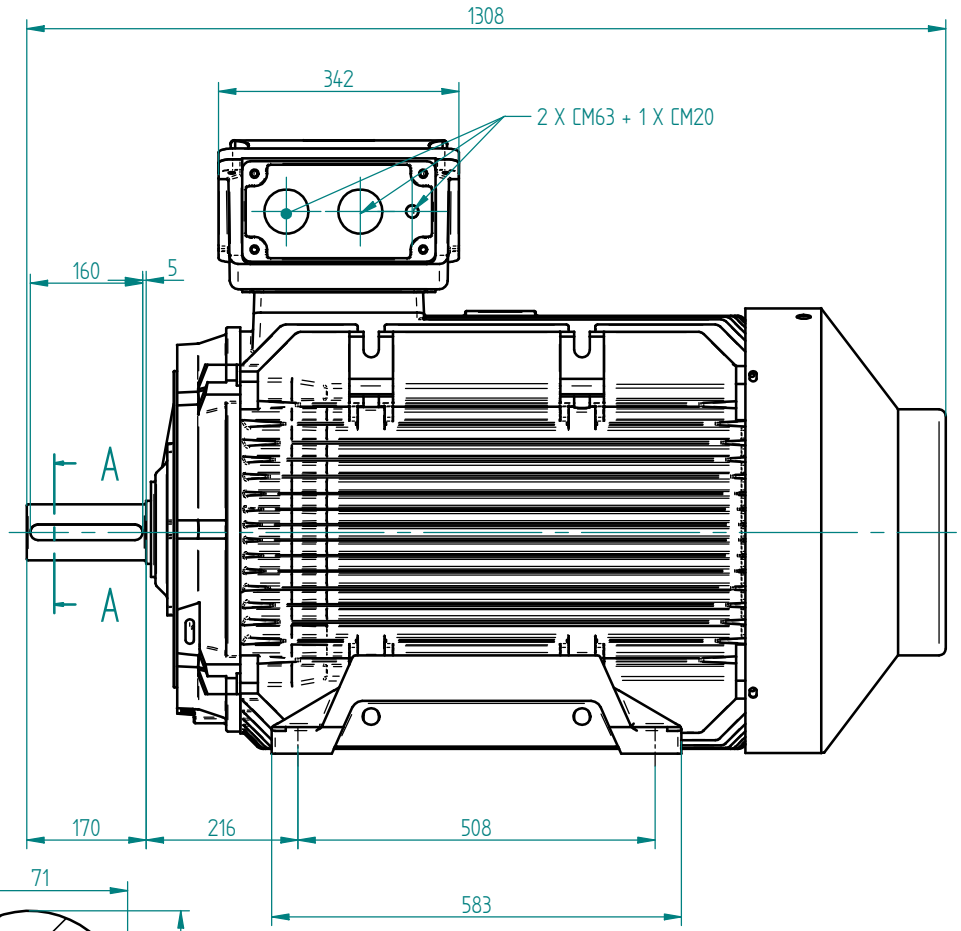

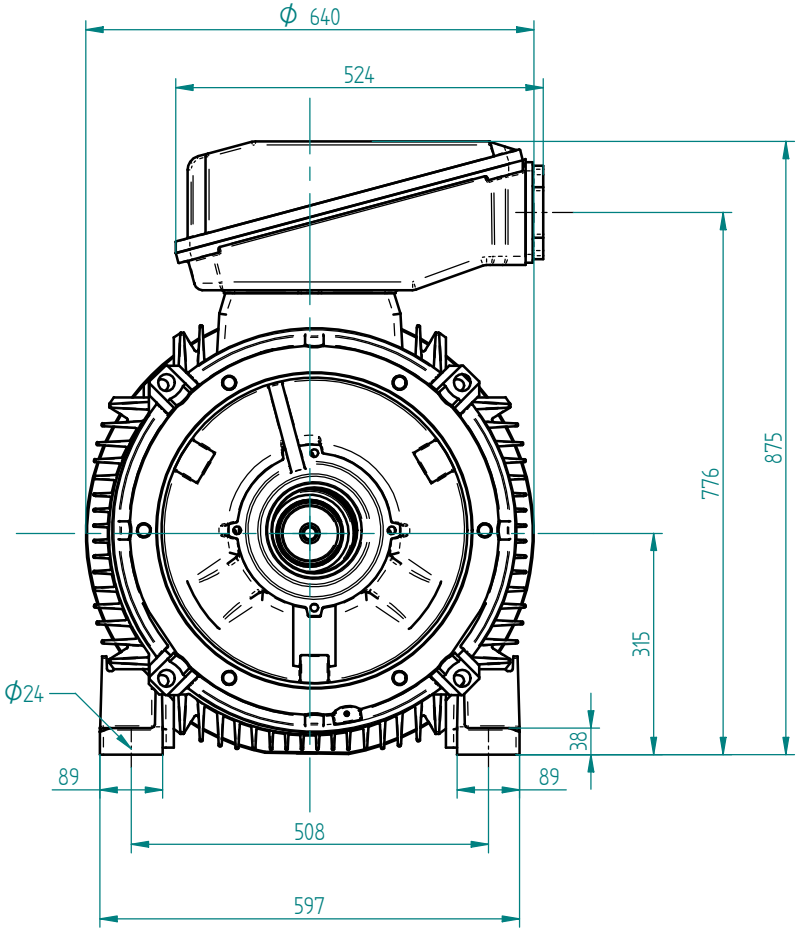

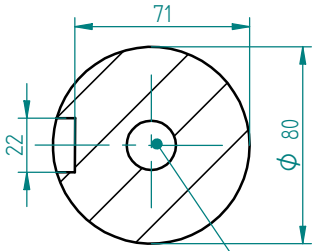

A–A
1:2

TAPPED HOLE
M20 X 42 DEEP TO DIN 332 D

TERMINAL BOX POSITION:- CAN BE ARRANGED AT EITHER 9,12 OR 3 O□OCK BY MOVING
CONDUIT ENTRIES:- TERMINAL BOX CAN BE ROTATED AT 90° INTERVALS
(CONDUIT ENTRY POSITION SHOWN FOR ILLUSTRATION ONLY)

ALL DIMENSIONS IN MILLIMETERS

FIRST ANGLE PROJECTION

BROOK CROMPTON

Produced by ***Tamel S.A.*** *a company of* **ATB**

SHEET SIZE	TITLE:		NAME	DATE	DRG. No.
A3	OUTLINE DIMENSION DRAWING W CAST IRON TOTALLY ENCLOSED FAN COOLED	DRAWN	DL	24-08-12	DRG. REF.
	FRAME SIZE: WP-UDF315LN 4P	CHECKED			REVISION: DATE:
		SCALE	1 : 7		